Manual Balancing Kit - V3IH Submittal

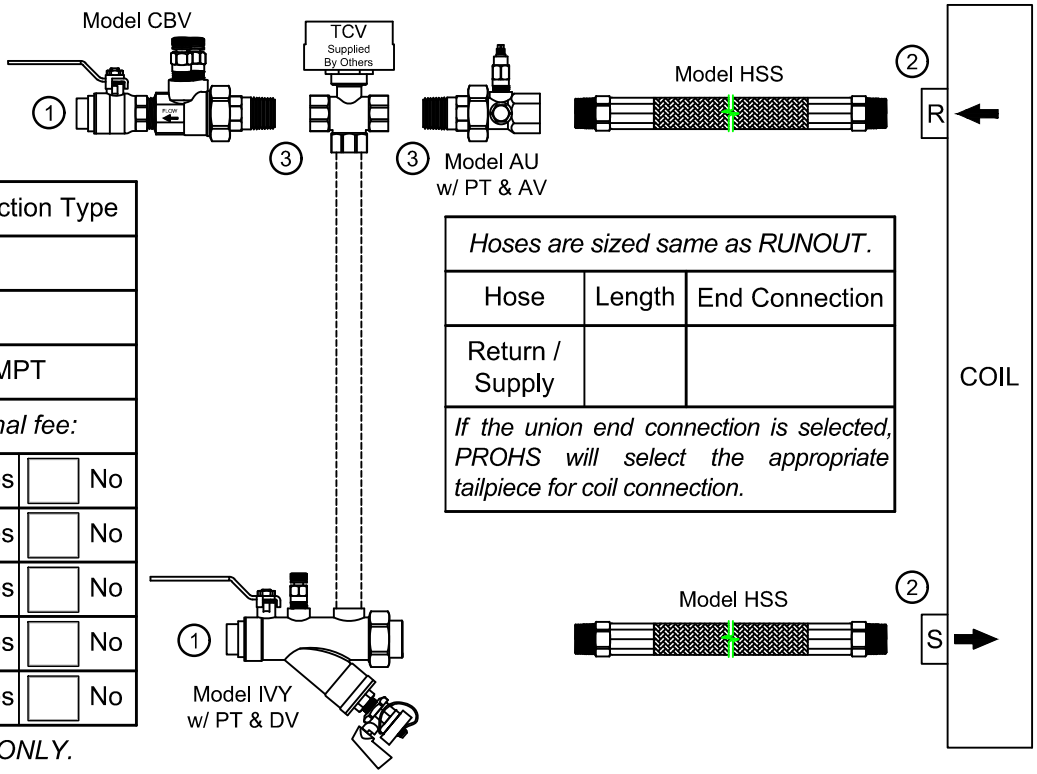

	#	Size	Connection Type
Runout	1		
Coil	2		
TCV	3		MPT

Services provided for additional fee:		
Extended Components	☐ Yes	☐ No
Factory Mounted TCV	☐ Yes	☐ No
Stainless Steel Trim	☐ Yes	☐ No
Factory Mounted Hoses	☐ Yes	☐ No
Bag N Tag	☐ Yes	☐ No

** 3/8" Coil Size available in SWT ONLY.*

*** ProPress fittings supplied for additional fee.*

Hoses are sized same as RUNOUT.

Hose	Length	End Connection
Return / Supply		

If the union end connection is selected, PROHS will select the appropriate tailpiece for coil connection.

PRODUCT DESCRIPTION: The Manual Balancing Valve Kit is a packaged and partially preassembled grouping of components required to complete installation of a terminal unit. Temperature control valves, piping, and coils are supplied "by others". Mounting and testing of the customer supplied TCV is available at an additional charge.

QUANTITY	GPM	TAGGING INFORMATION

JOB NAME		REPRESENTATIVE			
ENGINEER		REF/PO#		DATE	
CONTRACTOR		SUBMITTED BY		DATE	